1500 Series Door Closers

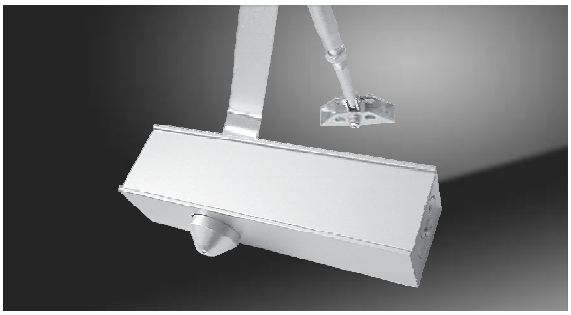

Limiting Dimensions

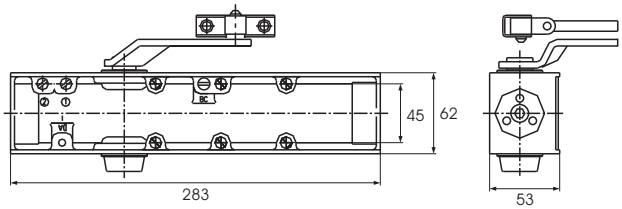

Selection Chart

Size	Regular Arm/ Top Jamb		Parallel/Track Arm		Door Weight(kg) Reference only	Function Available					
	Door Width (mm)		Door Width (mm)			Power Adjust	Latching Speed	Closing Speed	Delayed Action	Back Check	Hold Open
	Interior	Exterior	Interior	Exterior							
2	900	800	800	700	25-45	● (2-5)	●	●	●	○	○
3	1050	900	900	800	40-65						
4	1200	1050	1050	900	60-85						
5	1350	1200	1200	1050	80-115						

Note: ● Standard ○ Optional

Mounting Applications

Regular Arm Mounting (Pull Side) Cat No.: 1500

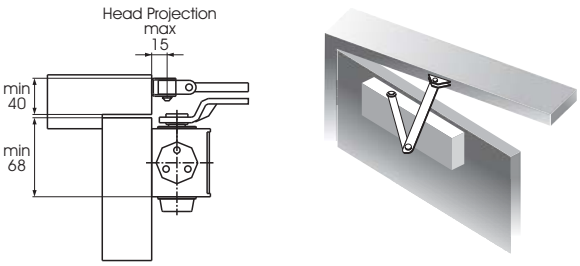

Top Jamb Mounting (Push Side) Cat No.: 1500

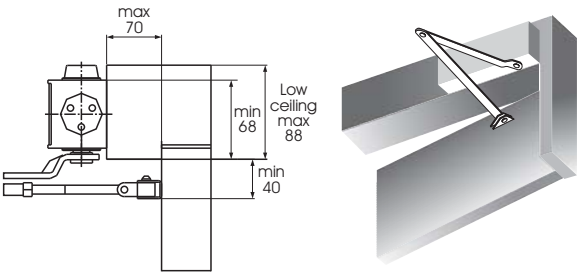

Track Arm Mounting (Push Side) Cat No.: 1500TR

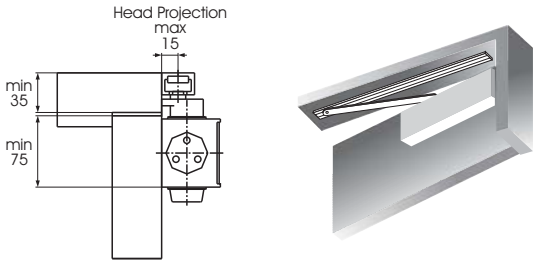

Parallel Arm Mounting (Push Side) Cat No.: 1500PA

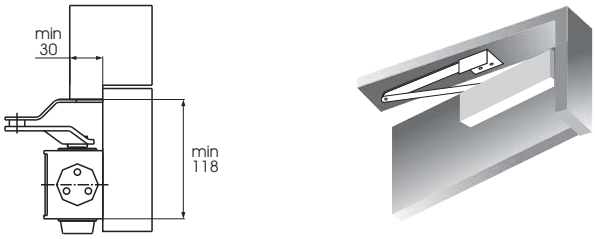

Top Jamb Track Arm Mounting (Pull Side) Cat No.: 1500TR

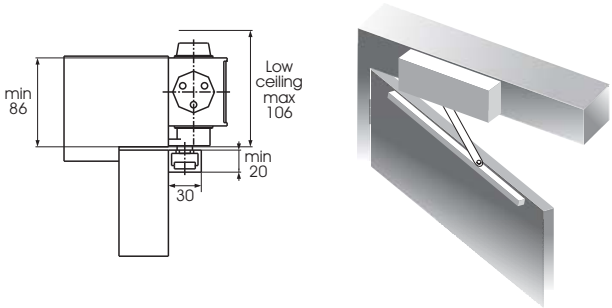

Features

- Slim line design
- Reversable for handing
- Power adjustable (Size2-5)
- Stainless steel cover available

Finish

SIL: Silver
GLD: Gold
SSS: Satin Stainless Steel
PSS: Polished Stainless Steel